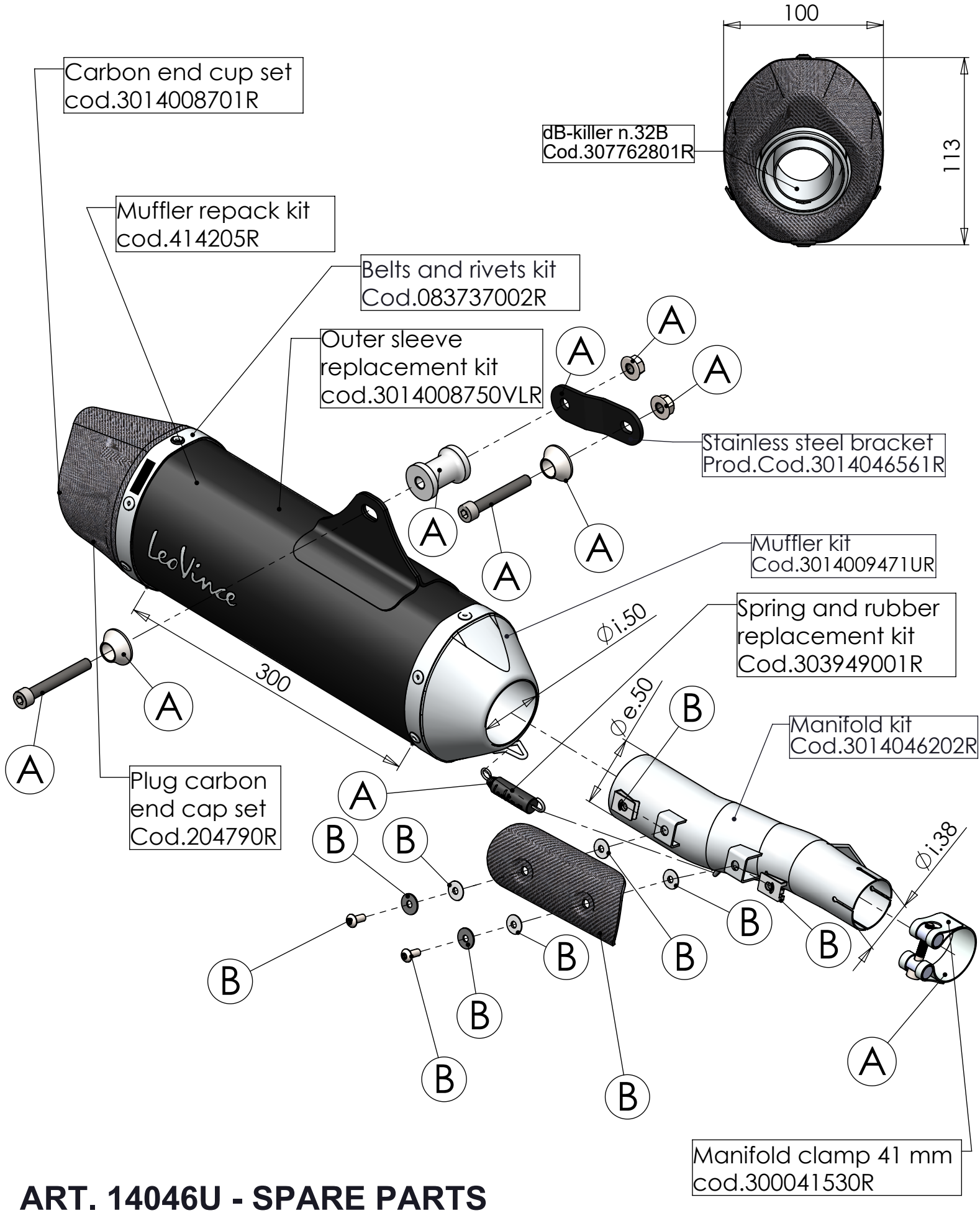

ART. 14046U - SPARE PARTS

HONDA X-ADV / FORZA 750

Ⓐ FITTING KIT cod.3014046601R
Ⓑ CARBON COVER KIT cod.303896001R