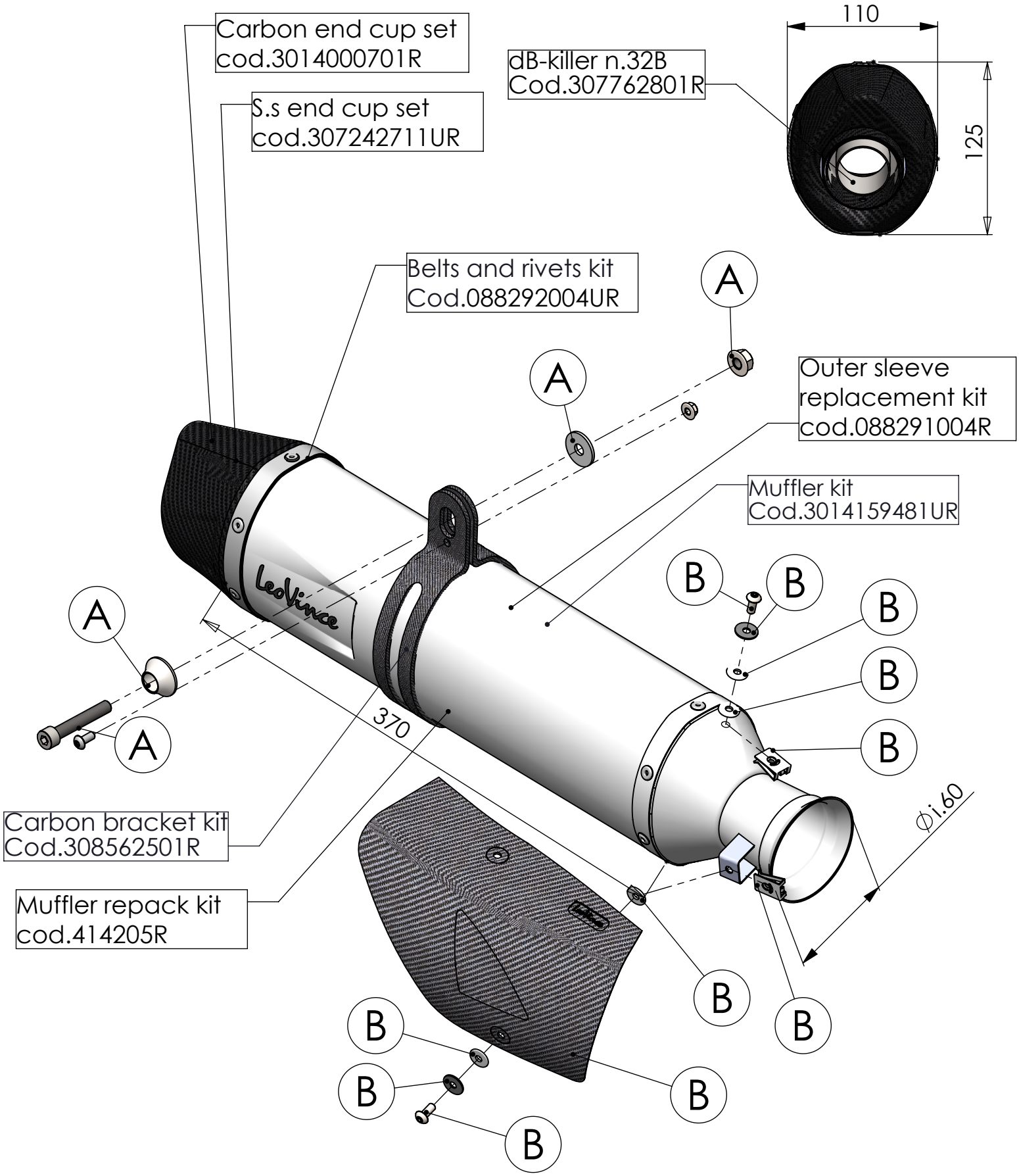

ART. 14159EU SPARE PARTS

KTM 1050 ADVENTURE - 1190 ADVENTURE / R - 1290 SUPER ADVENTURE
(also fits 35kW version) (Fits with rails for original and GIVI panniers)

Ⓐ FITTING KIT cod.3014033601R Ⓑ CARBON COVER KIT cod.3014033001R