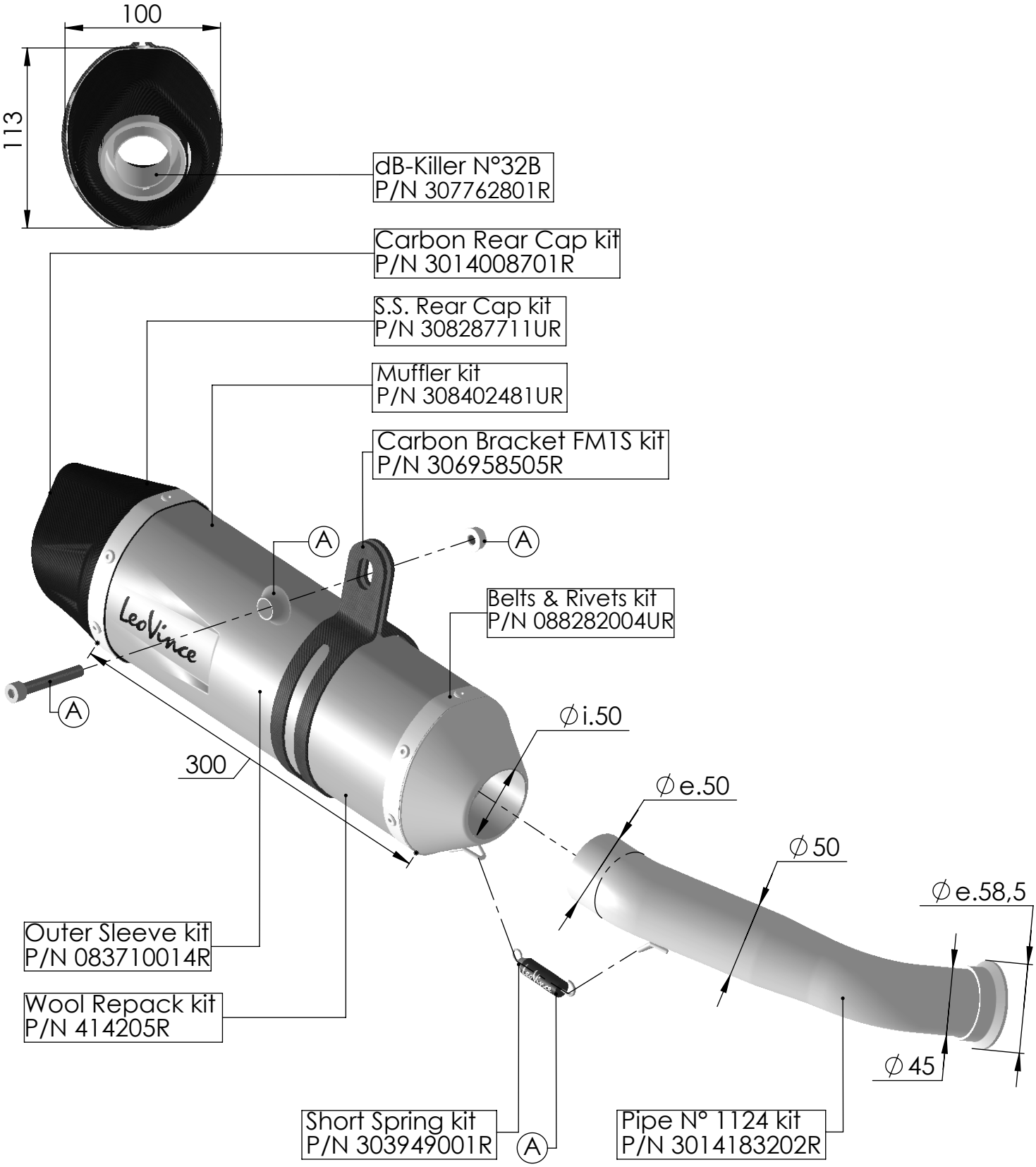

Ⓐ Fitting kit - P/N 3014183601R

ART. 14185EU - SPARE PARTS

KTM DUKE 125 / 390 - RC 125 / 390

SLIP-ON LV ONE EVO STAINLESS STEEL