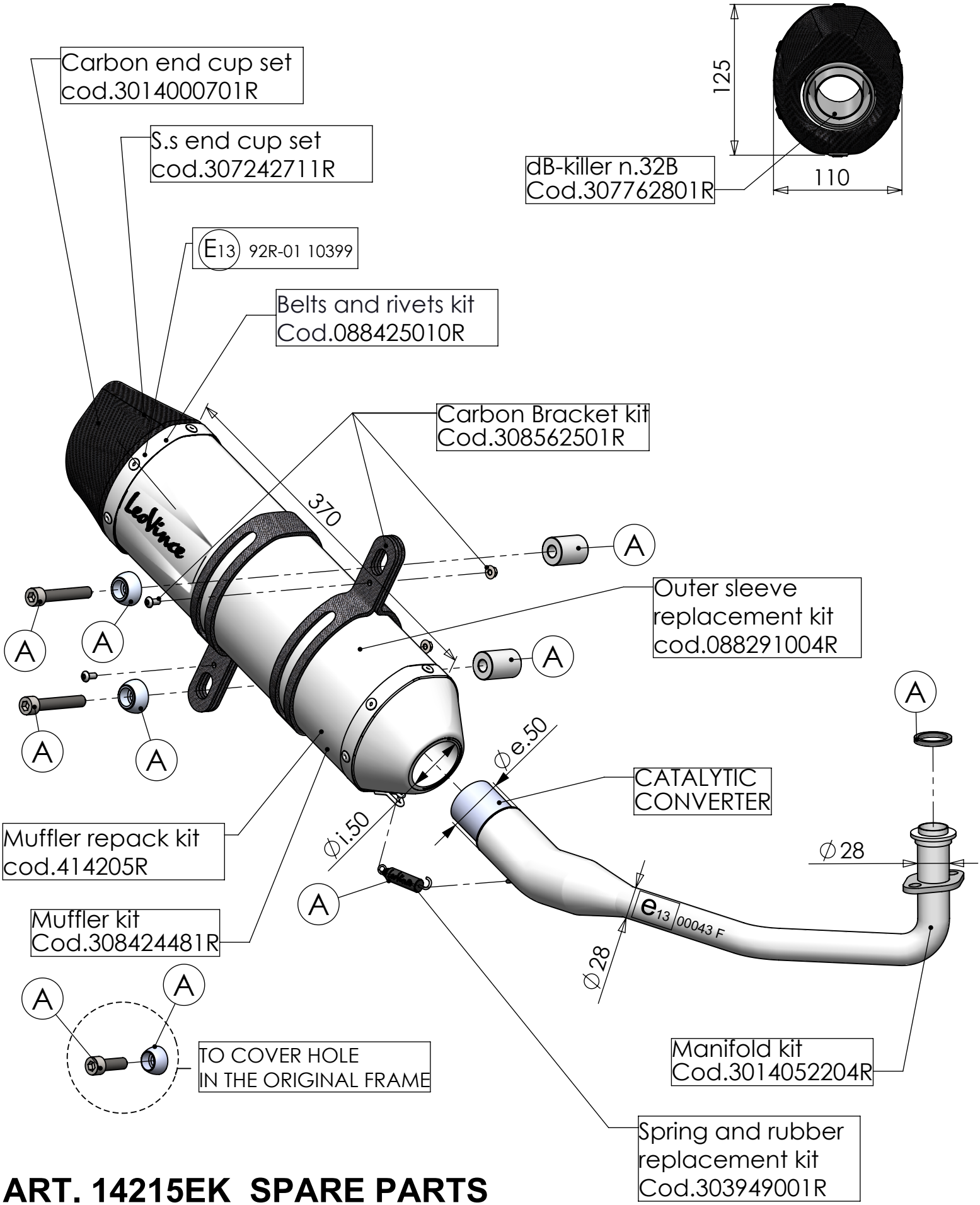

ART. 14215EK SPARE PARTS

HONDA FORZA 125 / NSS125 / ABS

(A) FITTING KIT cod.3014215601R