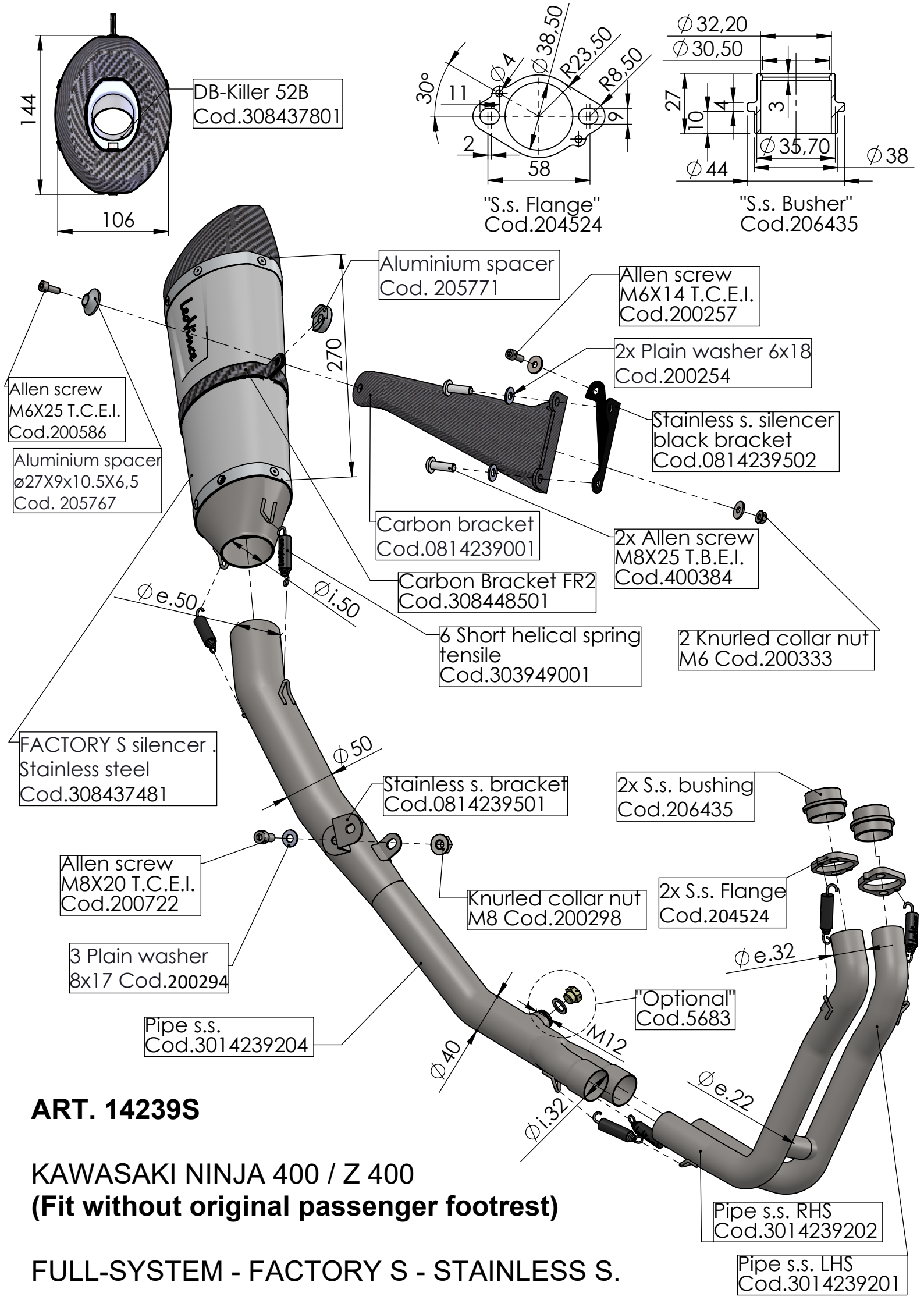

ART. 14239S

KAWASAKI NINJA 400 / Z 400

(Fit without original passenger footrest)

FULL-SYSTEM - FACTORY S - STAINLESS S.

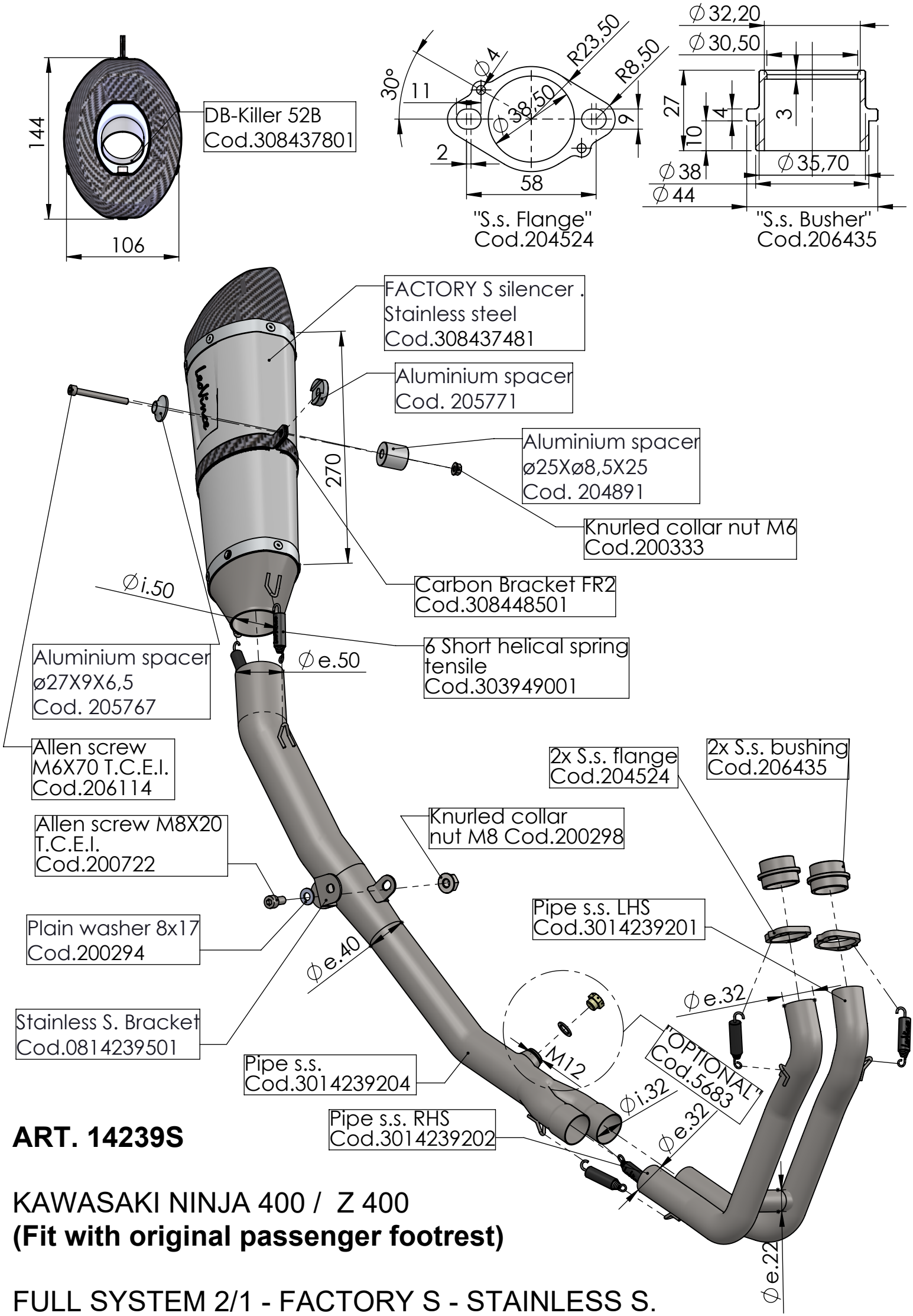

ART. 14239S

KAWASAKI NINJA 400 / Z 400

(Fit with original passenger footrest)

FULL SYSTEM 2/1 - FACTORY S - STAINLESS S.