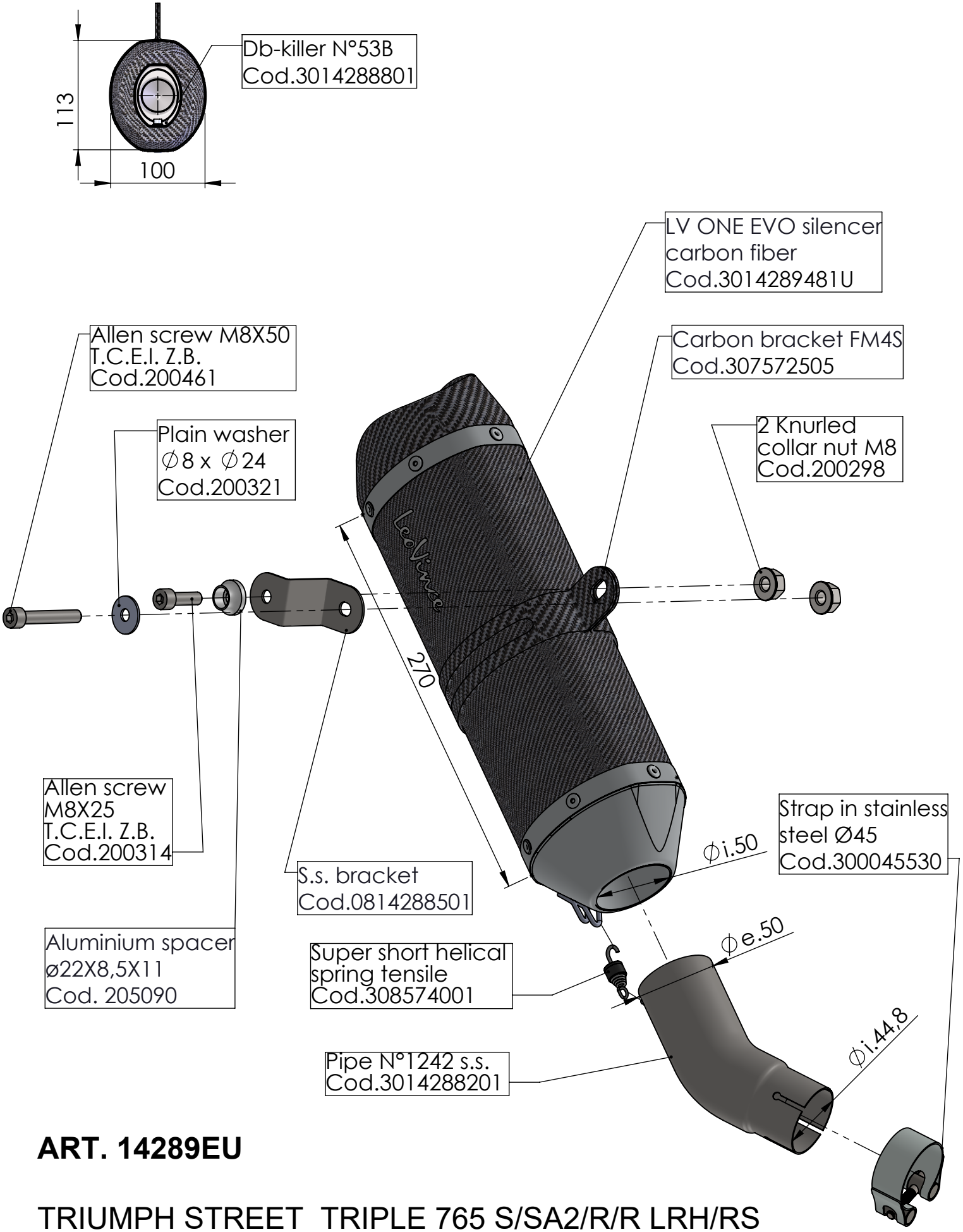

ART. 14289EU

TRIUMPH STREET TRIPLE 765 S/SA2/R/R LRH/RS
(also fits 660cc model, 35/70kW versions)

SLIP-ON - LV ONE EVO - CARBON