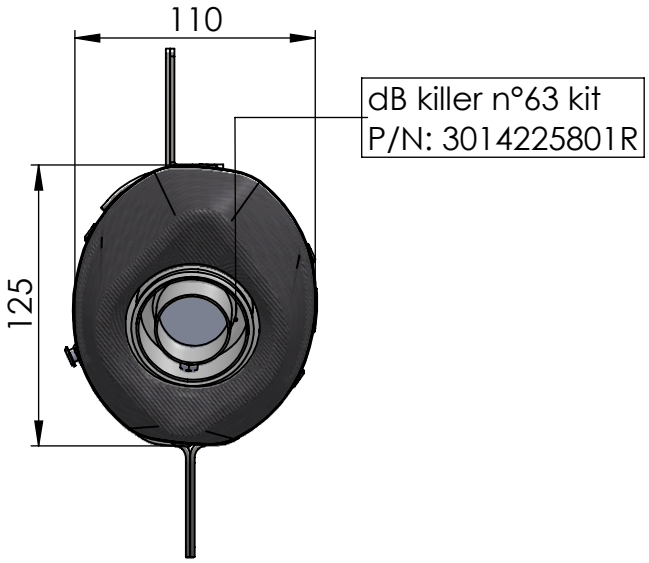

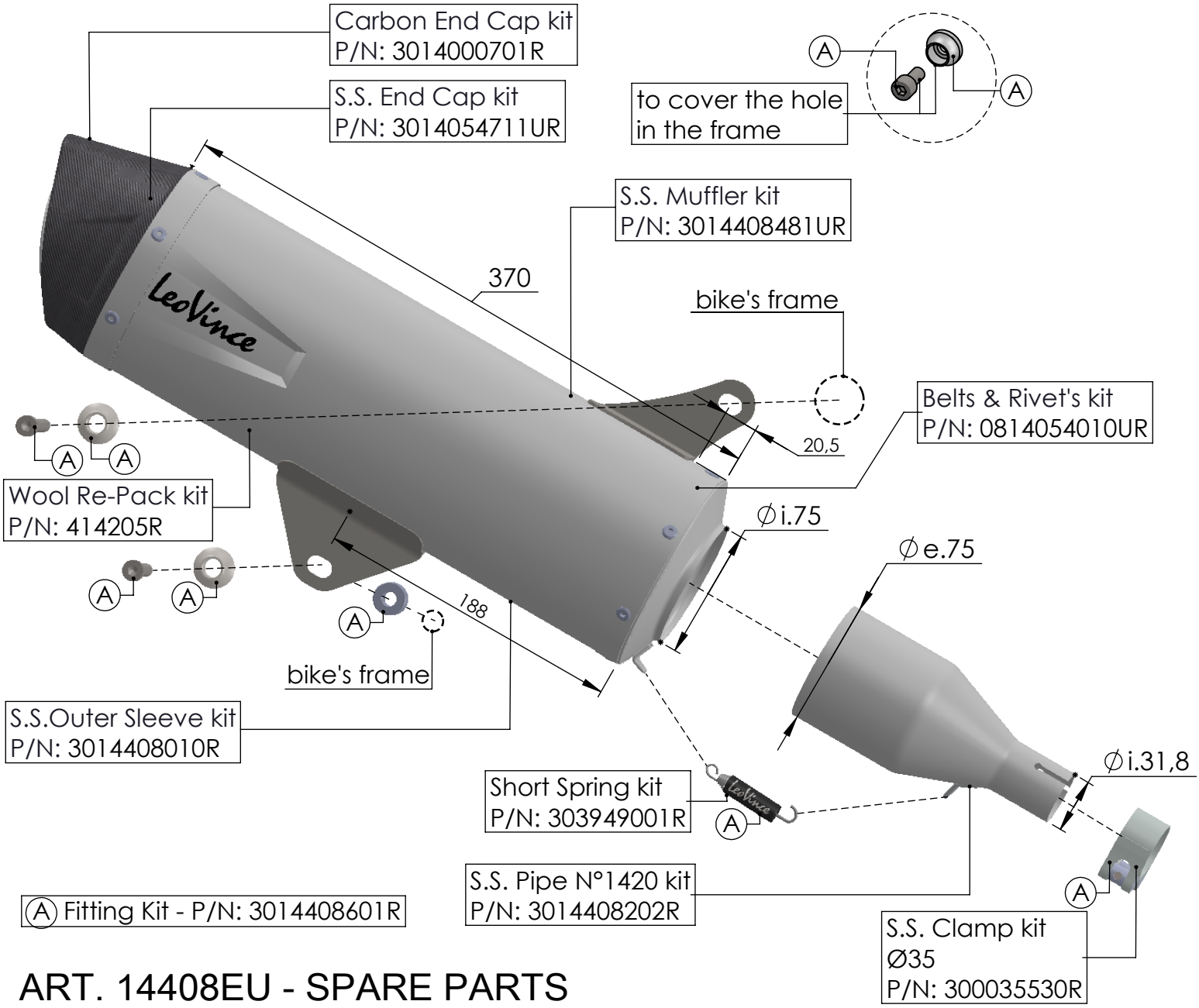

ART. 14408EU - SPARE PARTS

APRILIA SR GT 125

SLIP-ON LV ONE EVO STAINLESS STEEL