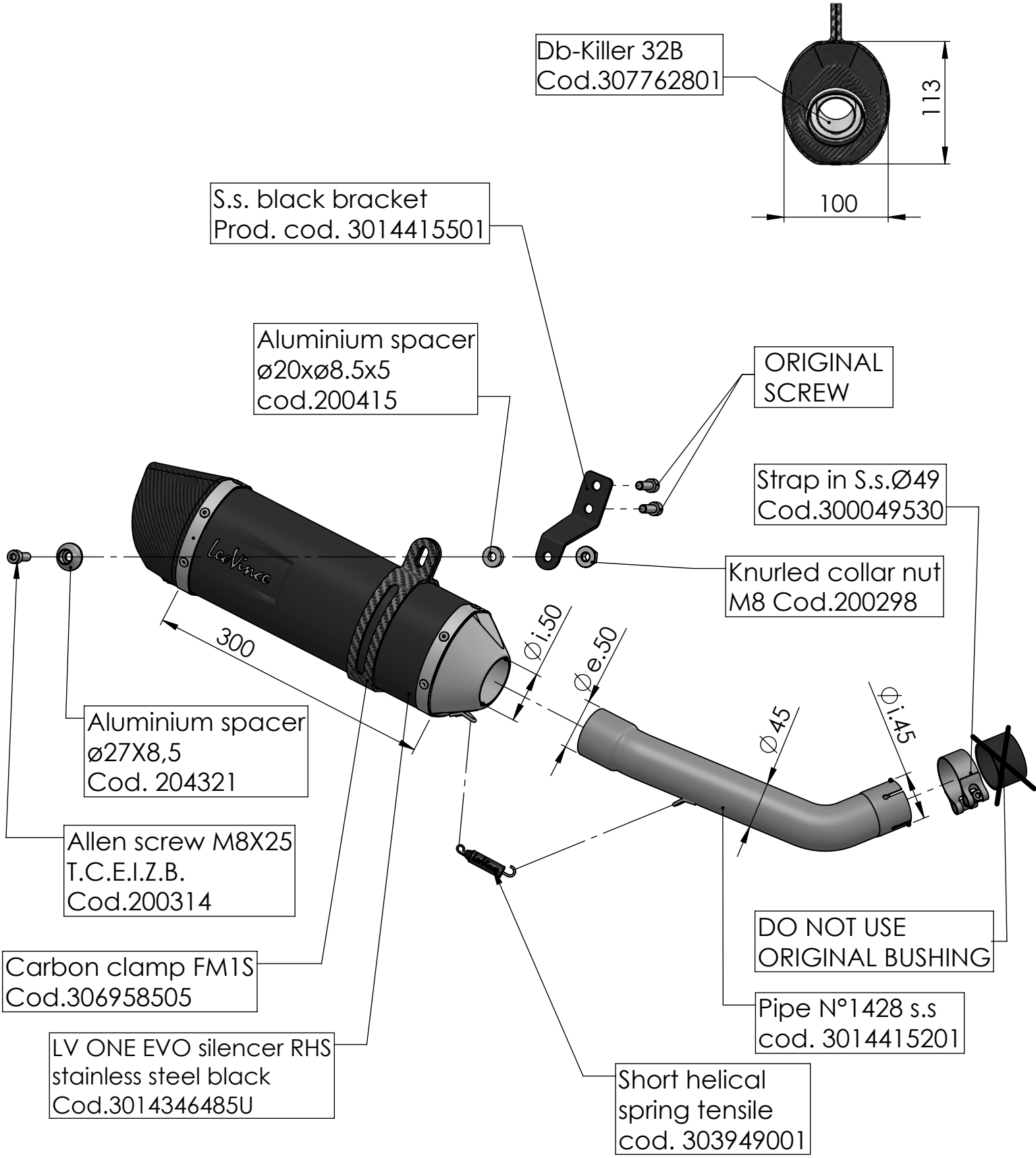

ART. 14415EBU

KTM RC 125 / RC 390

SLIP-ON - LV ONE EVO - S.S. Black