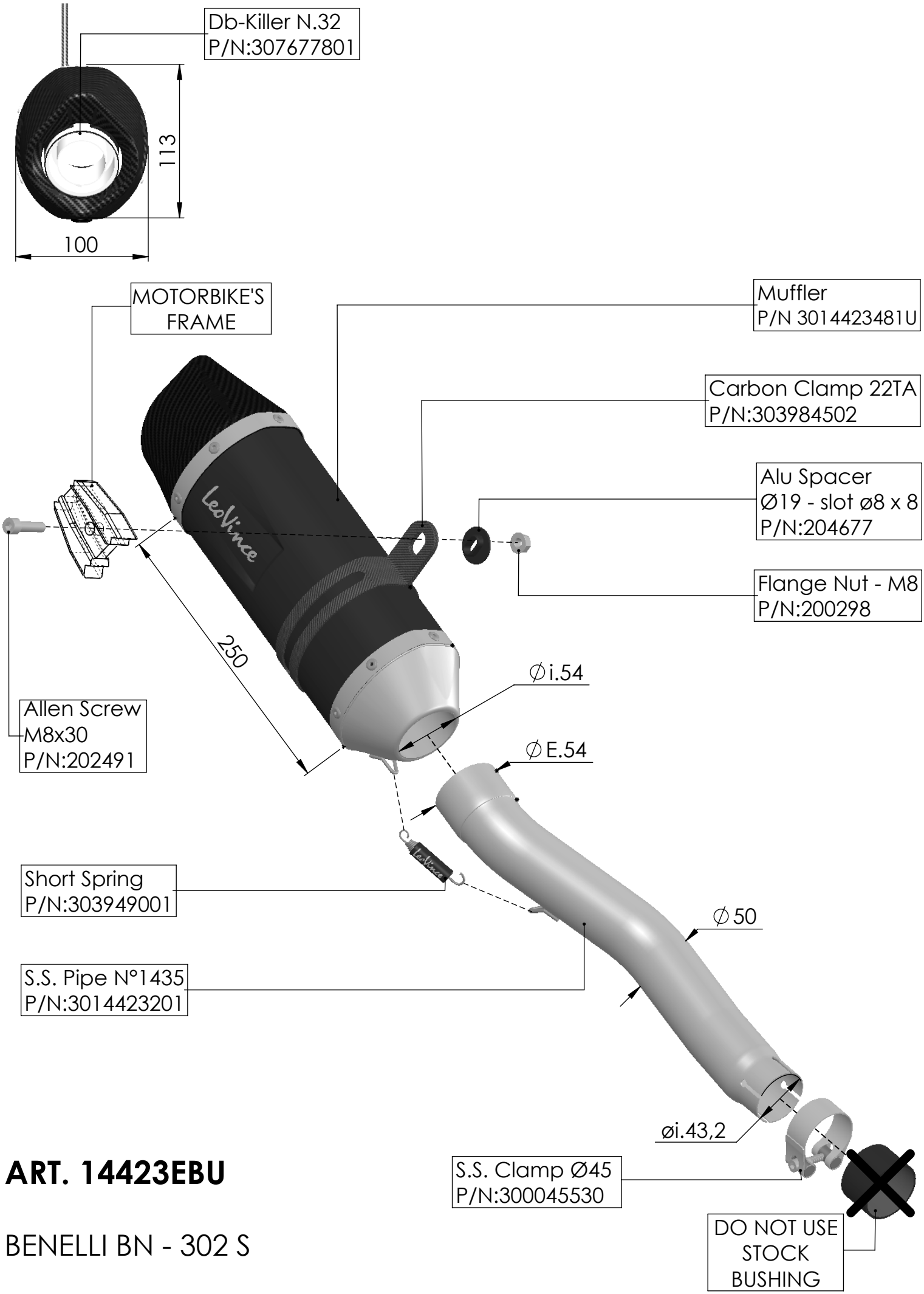

ART. 14423EBU

BENELLI BN - 302 S

SLIP-ON - LV ONE EVO - BLACK EDITION