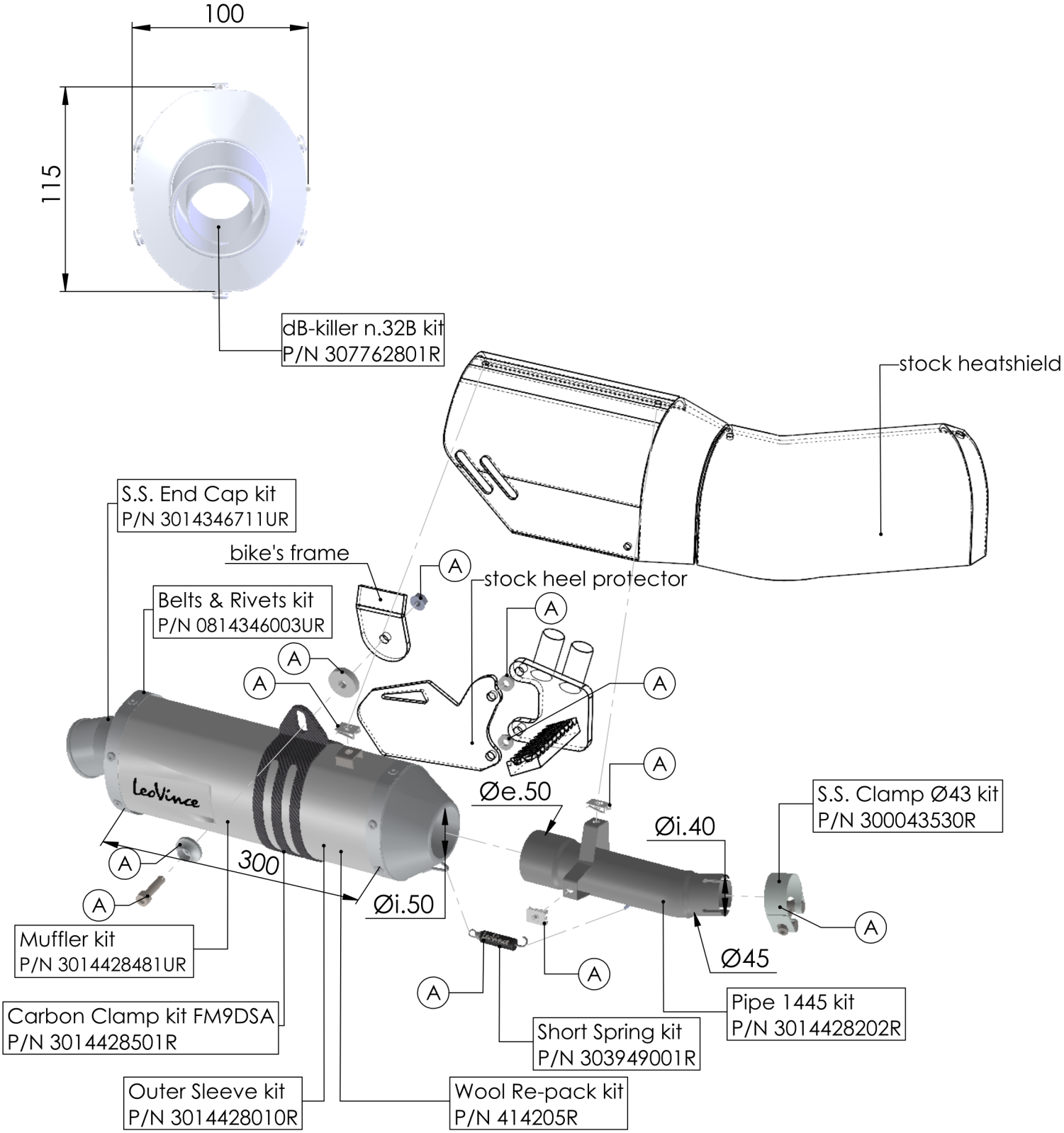


Ⓐ Fitting kit - P/N 3014428601R

# ART. 14428EU - SPARE PARTS

DUCATI DESERT X 937
(also fits 35kW version)

SLIP-ON LV ONE EVO STAINLESS STEEL