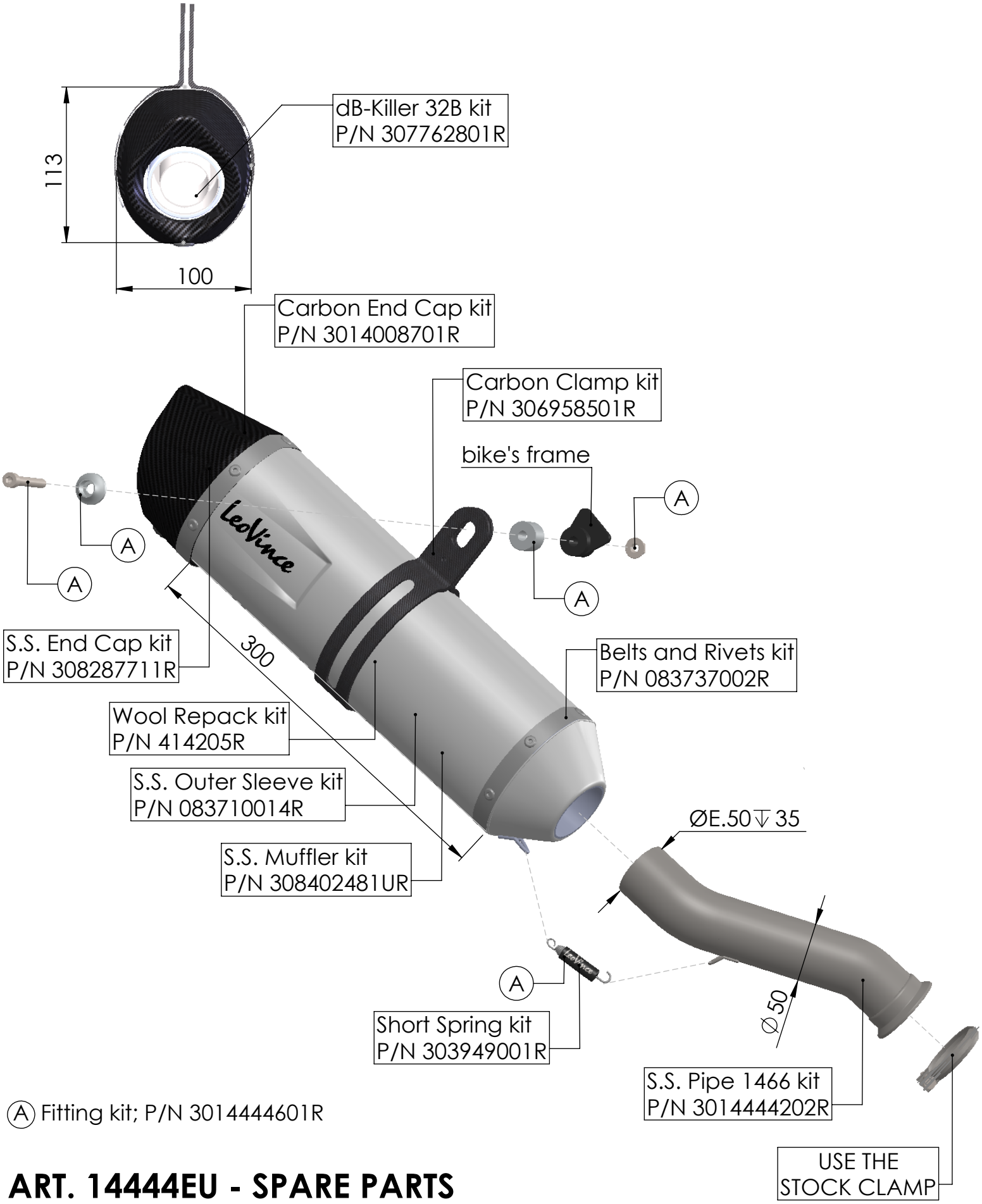

Ⓐ Fitting kit; P/N 3014444601R

ART. 14444EU - SPARE PARTS

CF MOTO NK 800

SLIP-ON - LV ONE EVO - STAINLESS STEEL