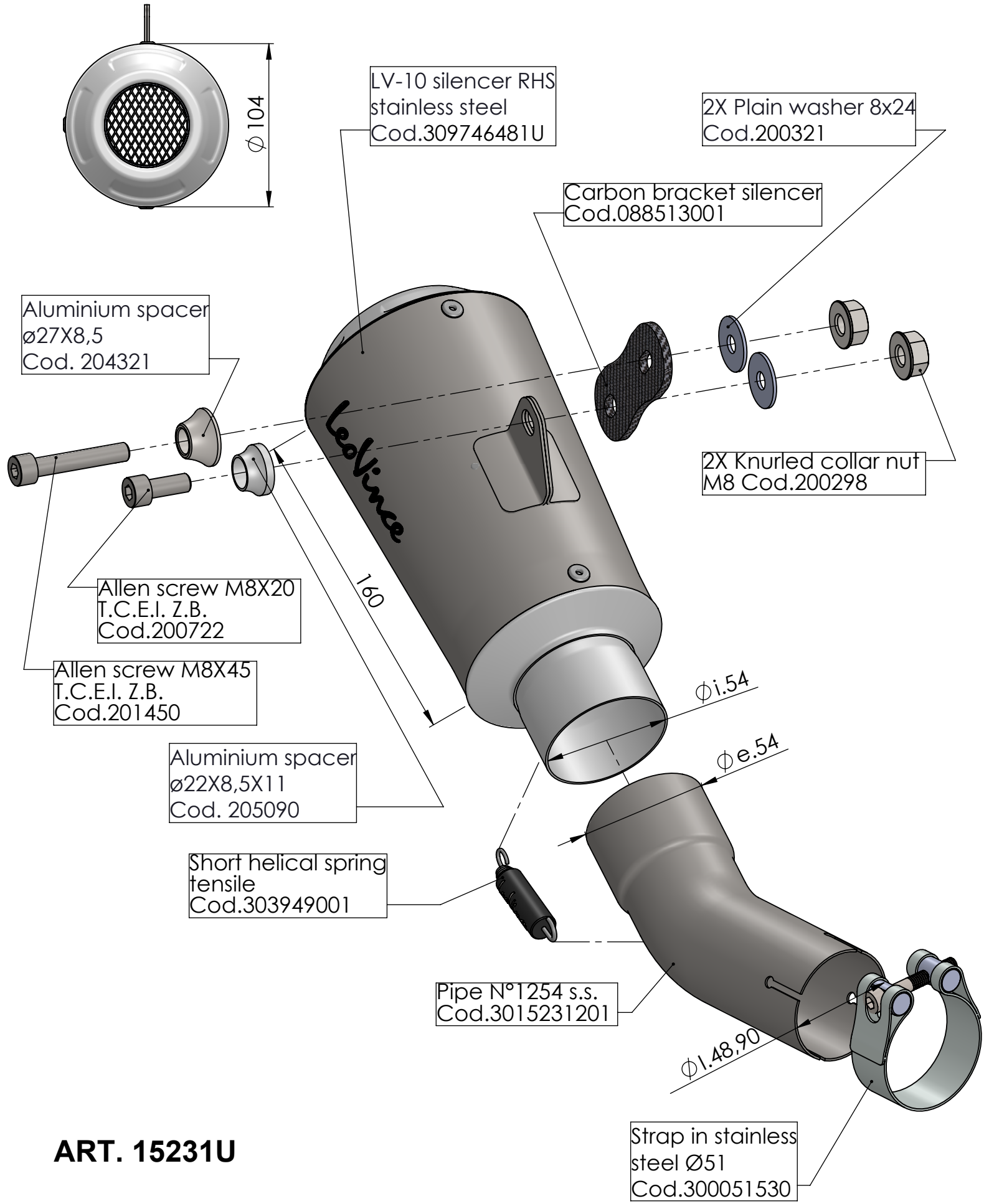

ART. 15231U

SUZUKI GSX - R 1000 / R

SLIP-ON - LV-10 - STAINLESS STEEL