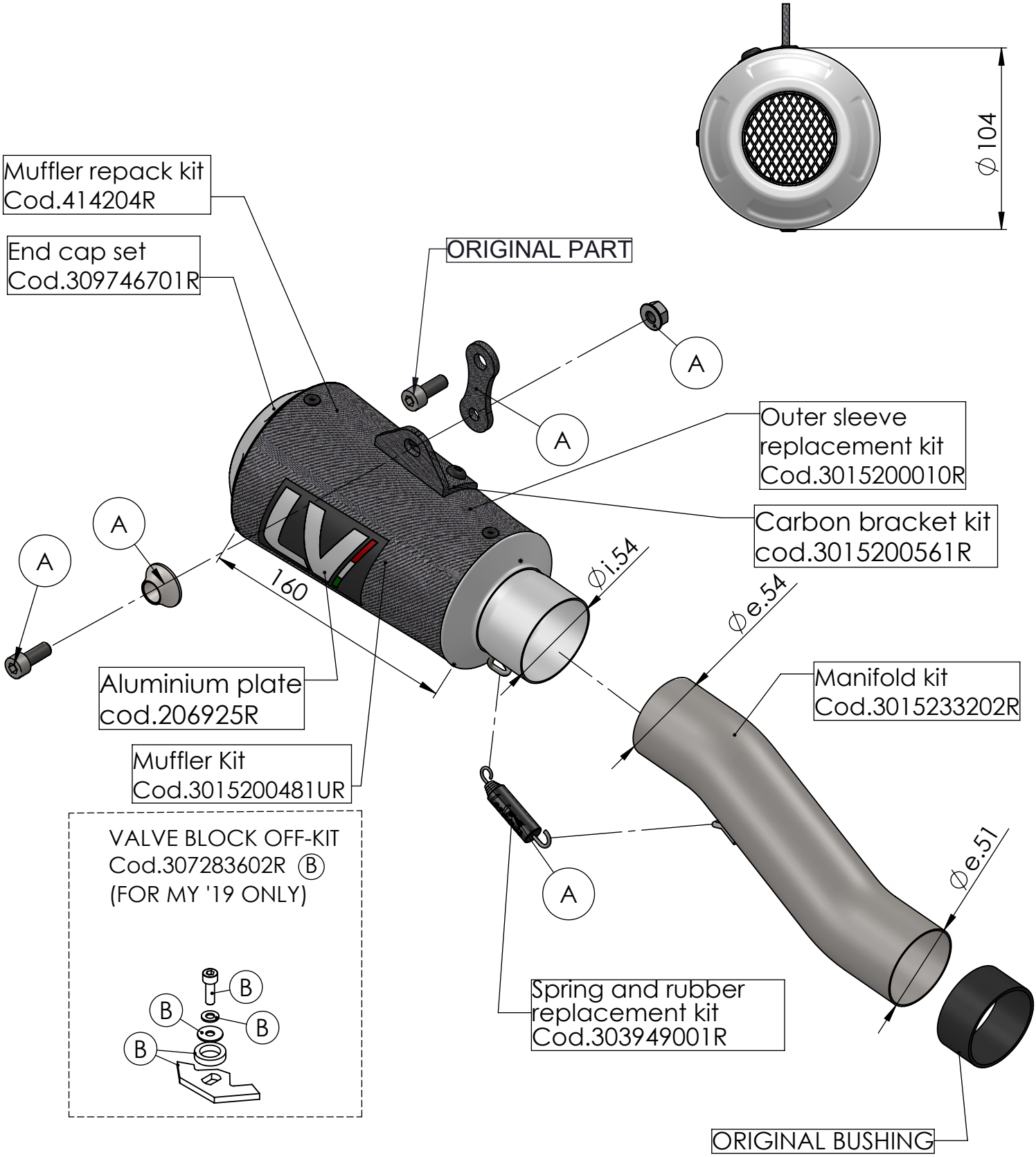

ART. 15233CU - SPARE PARTS

KAWASAKI ZX-6R-NINJA

Ⓐ FITTING KIT Cod.3015233601R