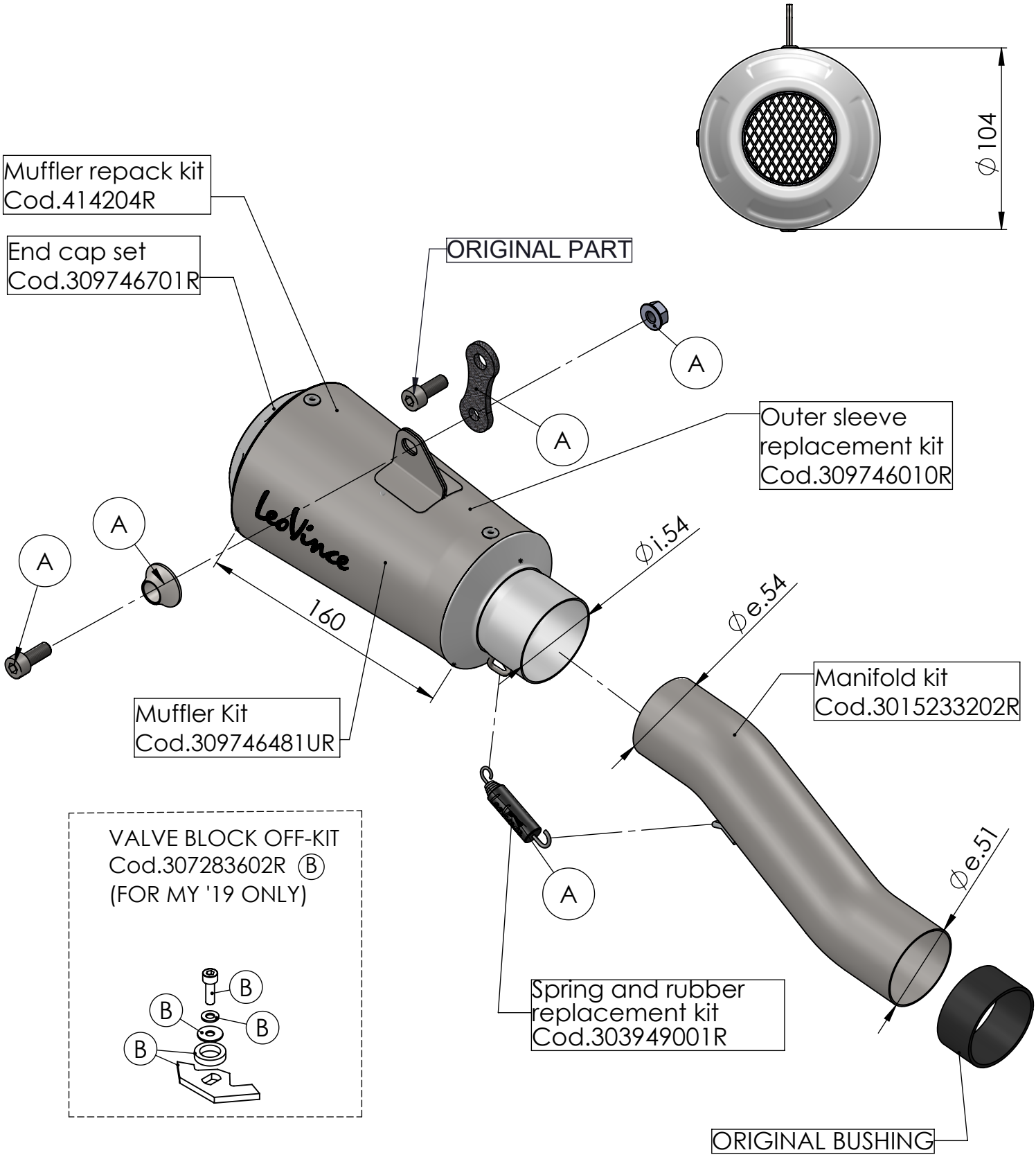

ART. 15233U - SPARE PARTS

KAWASAKI ZX-6R-NINJA

(A) FITTING KIT Cod.3015233601R