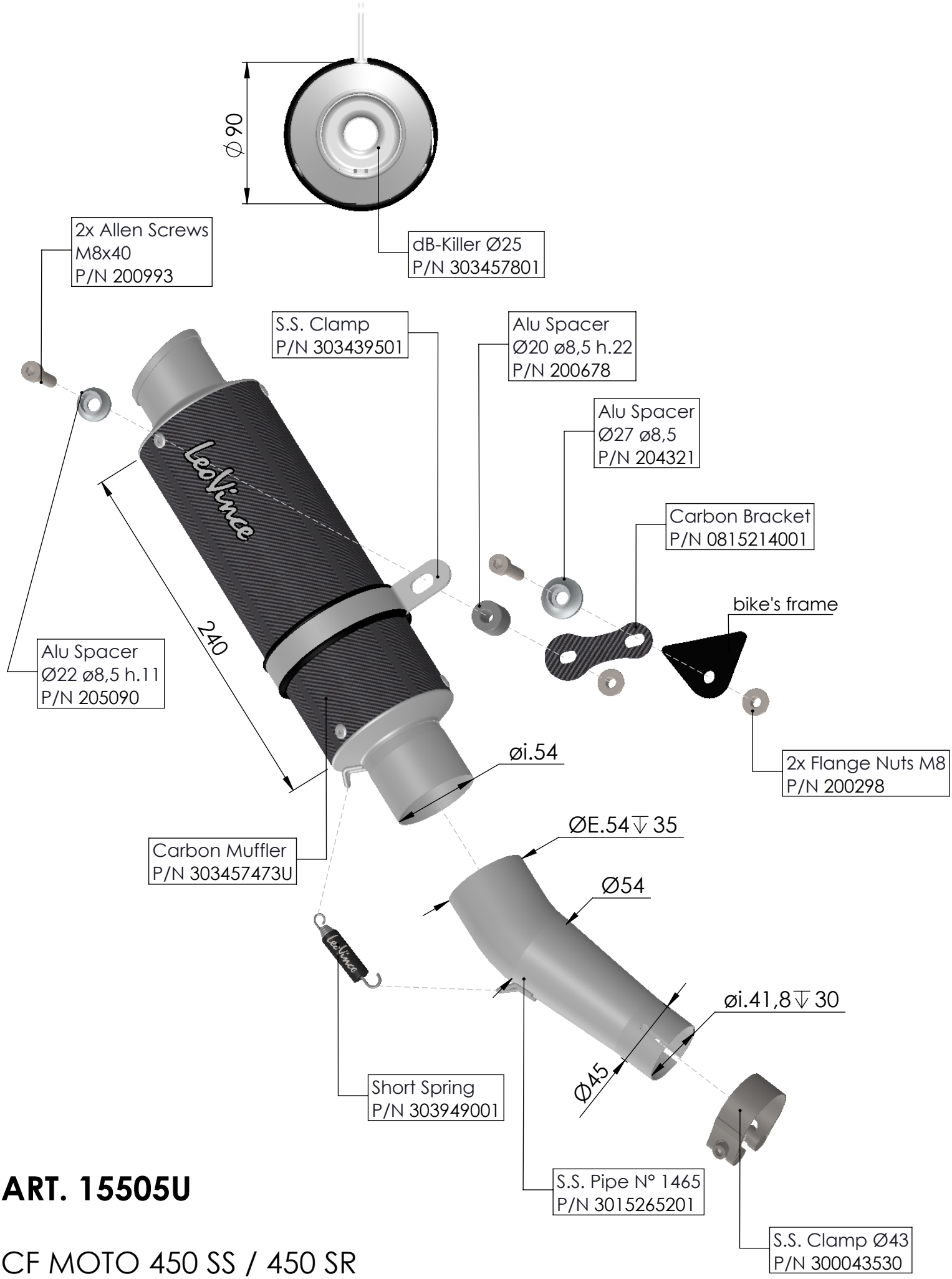

ART. 15505U

CF MOTO 450 SS / 450 SR

SLIP-ON GP CORSA CARBON