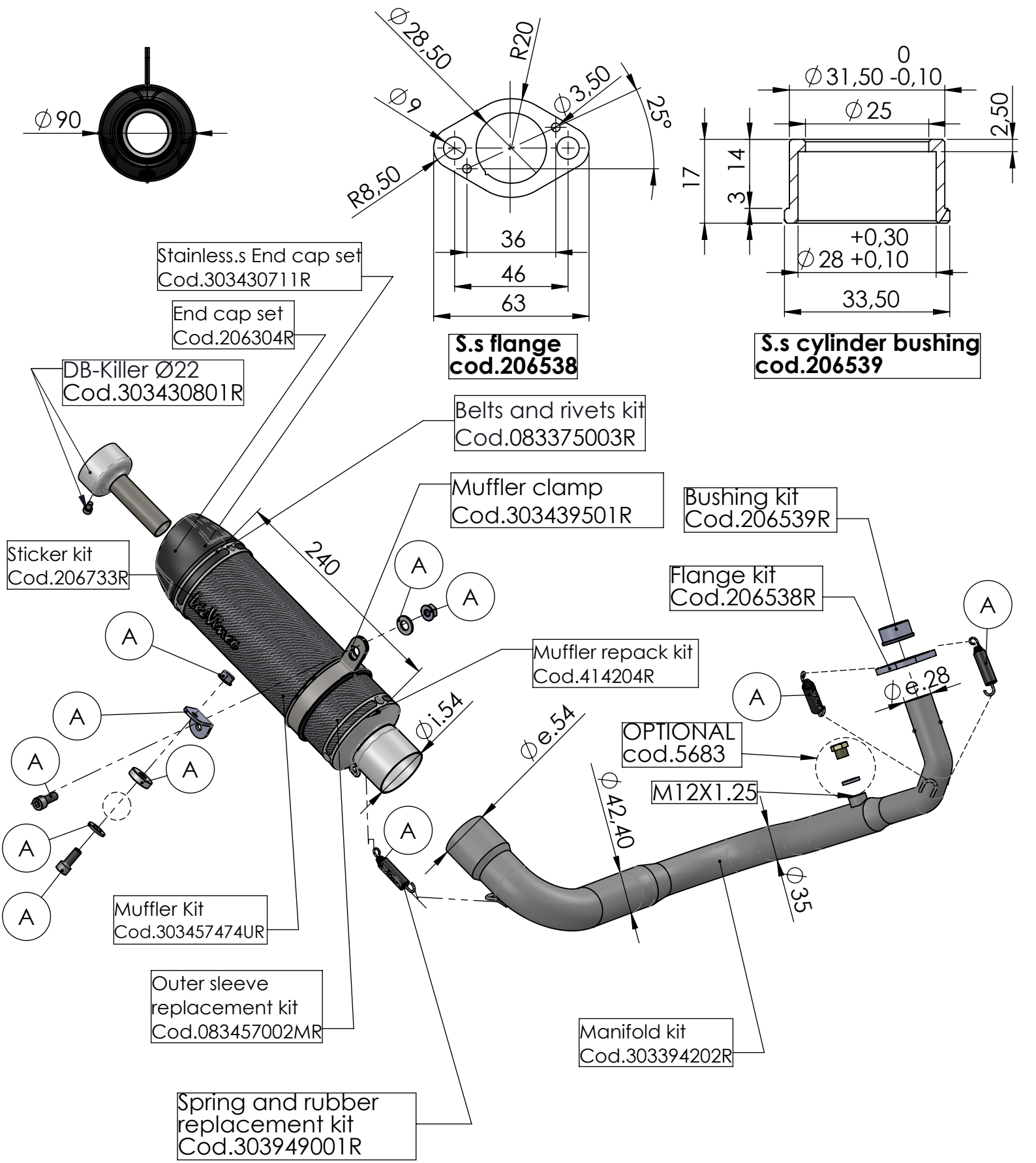

ART. 3394EU - SPARE PARTS

KAWASAKI Z125 PRO

Ⓐ FITTING KIT Cod. 303394601R