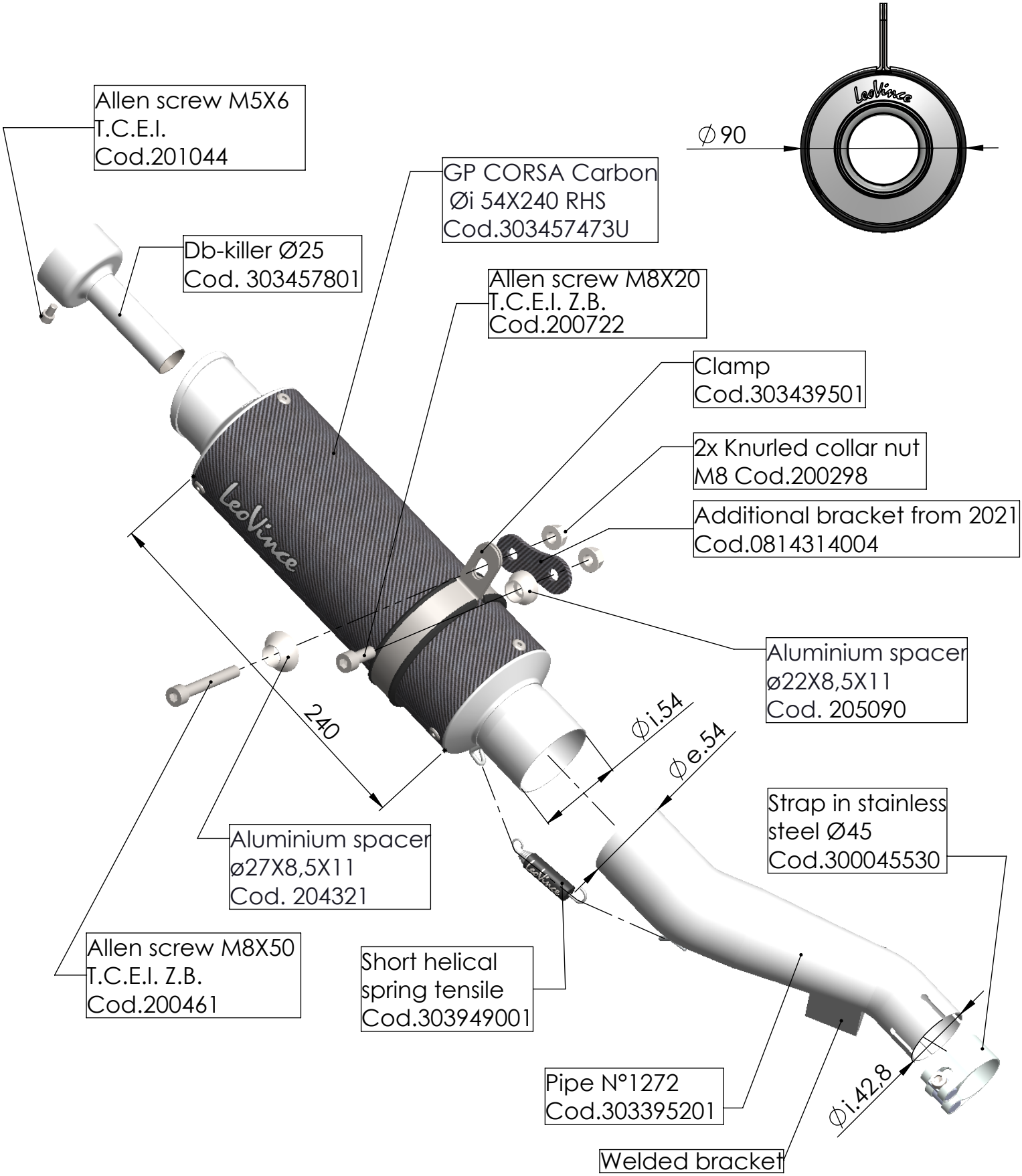

ART. 3395U

HONDA CB 500F / CBR 500R / CB 500X
(fits with original centre stand)

SLIP-ON - GP CORSA - CARBON