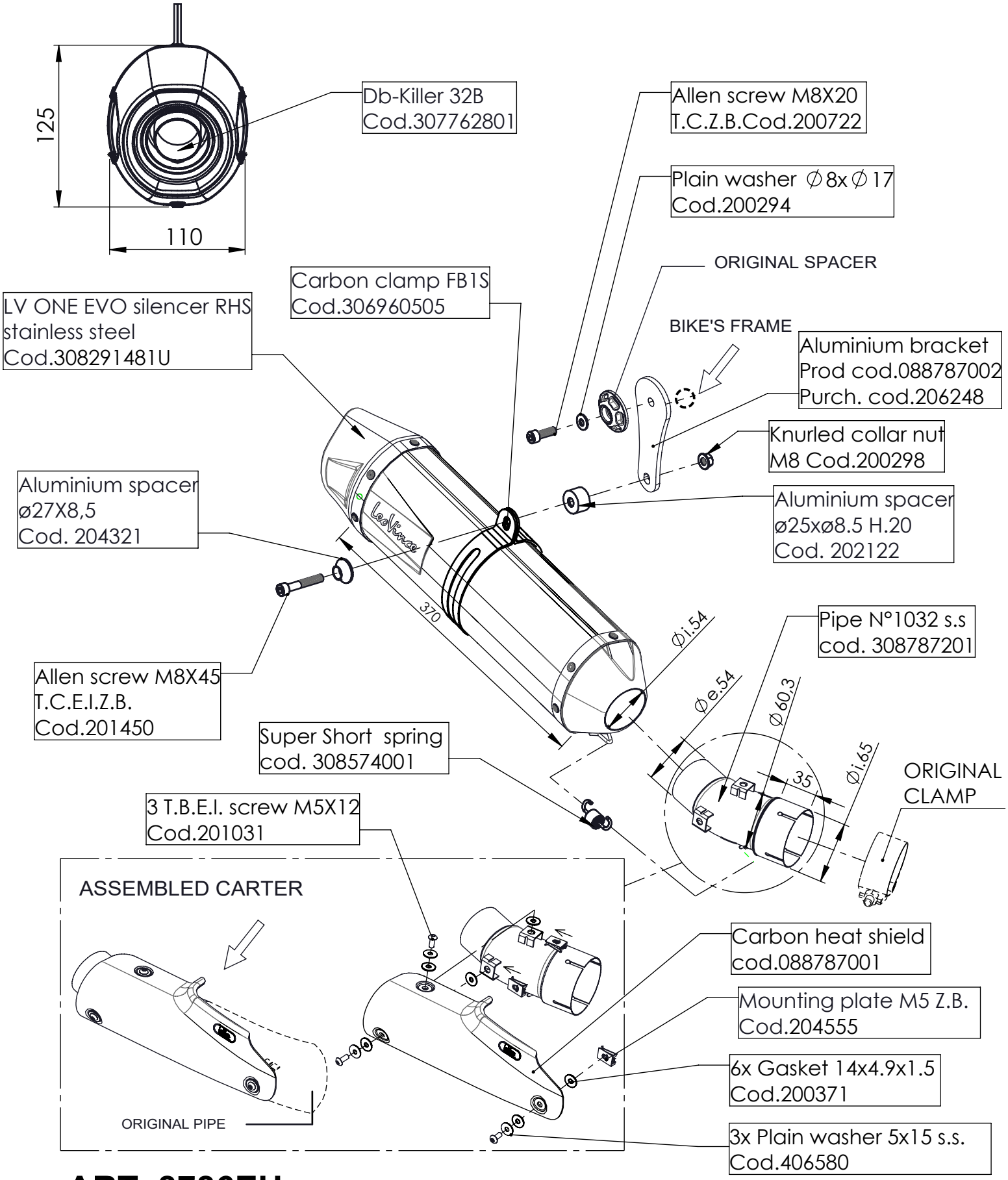

ART. 8786EU

BMW R 1200 GS / BMW R 1200 GS ADVENTURE
(fits with original panniers)

SLIP-ON - LV ONE EVO - STAINLESS STEEL